PAS 300

Profibus Slave Interface

Manual

Edition: 4b / 2003-11-18

HW 1 / FW 1.71 and higher

Order number 901-153-1AA02

All rights are reserved, including those of translation, reprinting, and reproduction of this manual, or parts thereof. No part of this manual may be reproduced, processed, copied, or transmitted in any way whatsoever (photocopy, microfilm, or other method) without the express written permission of Systeme Helmholz GmbH, not even for use as training material, or using electronic systems. All rights reserved in the case of a patent grant or registration of a utility model or design.

Copyright © 2003 by

Systeme Helmholz GmbH

Gewerbegebiet Ost 36, 91085 Weisendorf, Germany

Note:

We have checked the content of this manual for conformity with the hardware and software described. Nevertheless, because deviations cannot be ruled out, we cannot accept any liability for complete conformity. The data in this manual have been checked regularly and any necessary corrections will be included in subsequent editions. We always welcome suggestions for improvement.

Step® SIMATIC®, and S7-300® are registered trademarks of SIEMENS AG

Contents

1	**Safety Information**	**5**
1.1	General	5
1.2	Restriction of access	6
1.3	Information for the user	6
1.4	Use as intended	6
1.5	Avoiding use not as intended!	6
1.6	Installation and mounting	6
2	**Installation and mounting**	**7**
2.1	Vertical and horizontal mounting	7
2.2	Minimum clearance	8
2.3	Mounting of the module on the DIN rail	8
3	**System Overview**	**10**
3.1	Application and function description	10
3.2	Connections	11
3.3	LED displays	11
3.4	Accessories	11
4	**Configuration**	**12**
4.1	Hardware configurer	12
4.2	Slot identification	13
4.3	Address setting	13
4.4	Programming	14
4.5	Modules supported	15
4.5.1	Digital	15
4.5.2	Analog	16
4.5.3	Modules not supported	16
5	**Technical data**	**17**
5.1	Pin assignment	18
5.2	Further documentation	18

c 02-1/03

1 Safety Information

Please observe the safety information given for your own and other people's safety. The safety information indicates possible hazards and provides information about how you can avoid hazardous situations.

The following symbols are used in this manual.

! *Caution, indicates hazards and sources of error*

gives information

hazard, general or specific

danger of electric shock

1.1 General

The PAS 300 Master Module is only used as part of a complete system.

! *The operator of a machine system is responsible for observing all safety and accident prevention regulations applicable to the application in question.*

During configuration, safety and accident prevention rules specific to the application must be observed.

Emergency OFF facilities according to EN 60204 / IEC 204 must remain active in all modes of the machine system. The system must not enter an undefined restart.

Faults occurring in the machine system that can cause damage to property or injury to persons must be prevented by additional external equipment. Such equipment must also ensure entry into a safe state in the event of a fault. Such equipment includes electromechanical safety buttons, mechanical interlocks, etc. (see EN 954-1, risk estimation).

Never execute or initiate safety-related functions using the operator terminal.

1.2 Restriction of access

Only authorized persons must have access to the modules!

The modules are open equipment and must only be installed in electrical equipment rooms, cabinets, or housings. Access to the electrical equipment rooms, barriers, or housings must only be possible using a tool or key and only permitted to personnel having received instruction or authorization. See also Chapter 0.

1.3 Information for the user

During configuration it is imperative to observe the safety and accident prevention rules applicable in the particular application.

This manual is addressed to anyone wishing to configure or install the PAS 300 module.

It is intended for use as a programming manual and reference work by the configuring engineer. It provides the installing technician with all the necessary data.

The PAS 300 modules is for use in a Profibus network only. For that reason, the configuring engineer, user, and installing technician must observe the standards, safety and accident prevention rules applicable in the particular application. The operator of the automation system is responsible for observing these rules.

1.4 Use as intended

The PAS 300 module must only be used as a Profibus interface as described in the manual.

1.5 Avoiding use not as intended!

Uncontrolled restarts must be prevented in the software.

Safety-related functions must not be controlled using the PAS 300 module alone.

1.6 Installation and mounting

Before you start installation work, all system components must be disconnected from their power source.

The module must be installed and mounted according to VDE 0100 IEC 364. Because they are IP00 modules, they must be installed in a switching cabinet. Ambient temperature: 0 ºC to 60 ºC.

2 Installation and mounting

The PAS 300 module must be installed according to VDE 0100 IEC 364. Because it is an "OPEN type" module, you must install it in a (switching) cabinet. Ambient temperature: 40 ºC – 60 ºC.

Before you start installation work, all system components must be disconnected from their power source.

Danger of electric shock!

During installation, application-specific safety and accident prevention rules must be observed.

2.1 Vertical and horizontal mounting

The modules can be mounted either vertically or horizontally.

Permissible ambient temperature:

- for vertical mounting: from 0 to 40 ºC
- for horizontal mounting: from 0 to 60 ºC

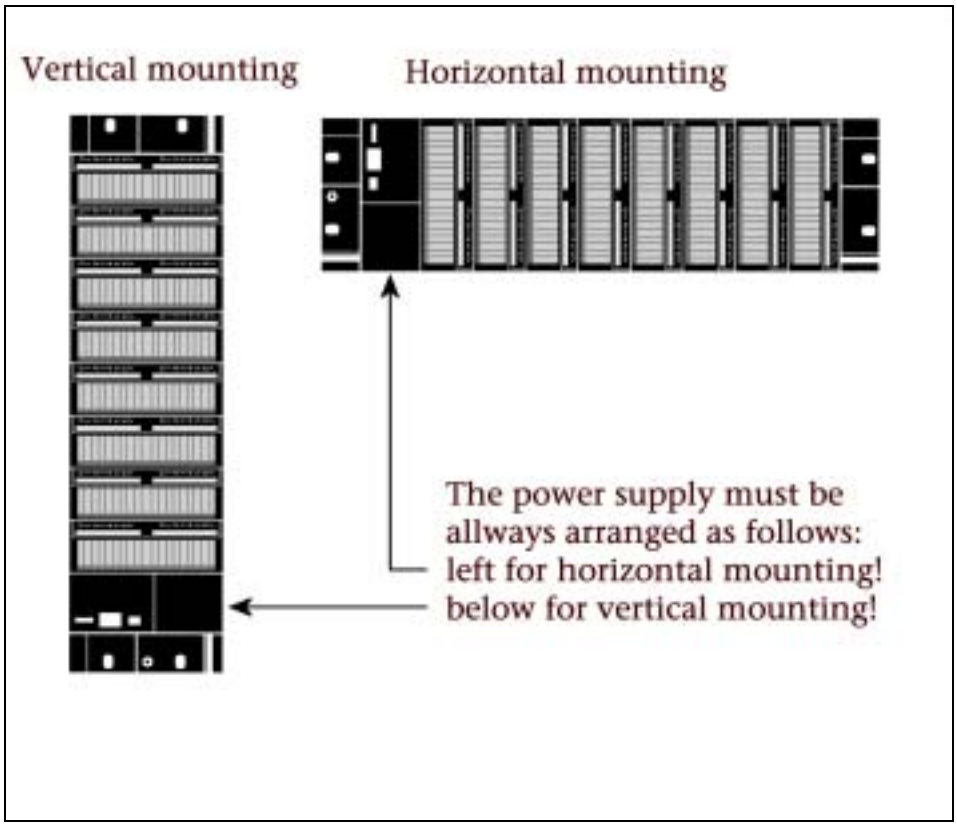

2.2 Minimum clearance

Minimum clearances must be observed because

- it ensures cooling of the PAS 300 modules
- it provides space to insert and remove modules
- it provides space to route cables
- it increases the mounting height of the module rack to 185 mm, although the minimum spacing of 40 mm must still be observed

The following diagram shows the minimum spacing between the module racks and between these and any adjacent cabinet walls, equipment, cable ducts, etc. for S7-300s mounted in several module racks.

Non-observance of the minimum distances can destroy the module at high ambient temperatures!

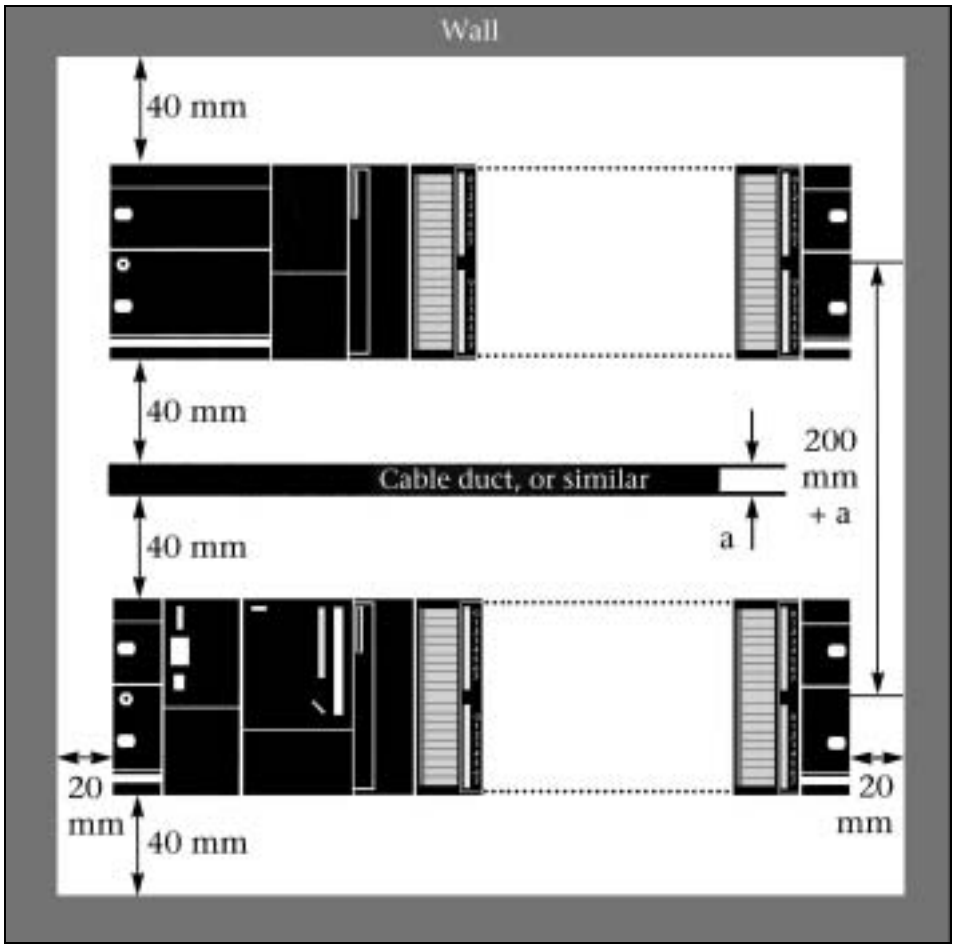

2.3 Mounting of the module on the DIN rail

When connecting the bus connect, always start with the PAS 300 module. Do not plug a bus connector into the last module of the tier.

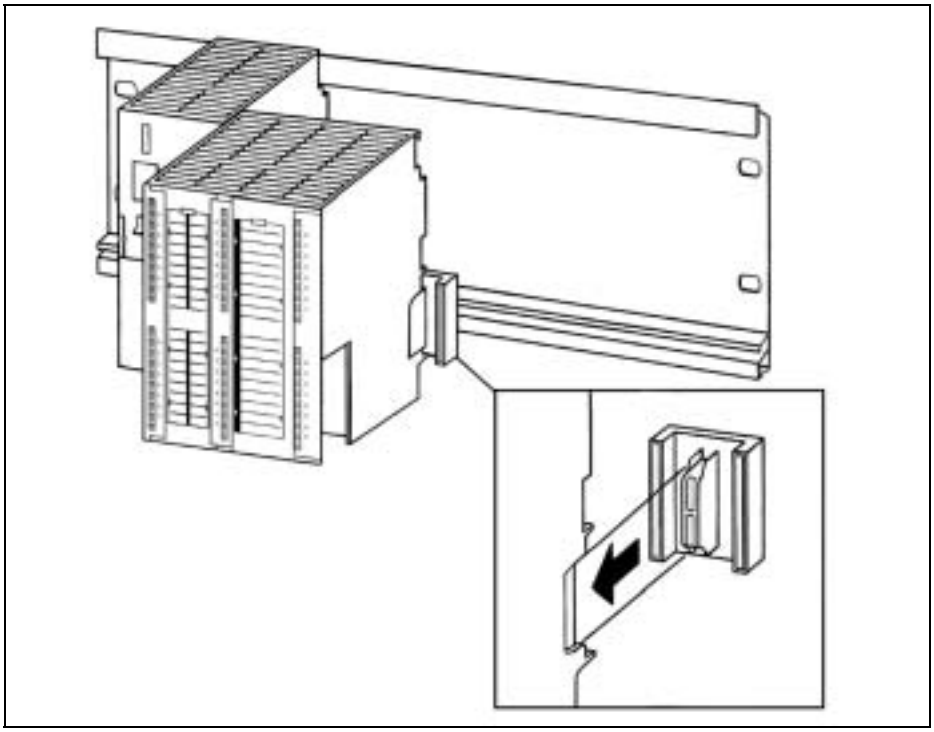

Hook on the modules (1), slide them up to the left module, and click them downward (3).

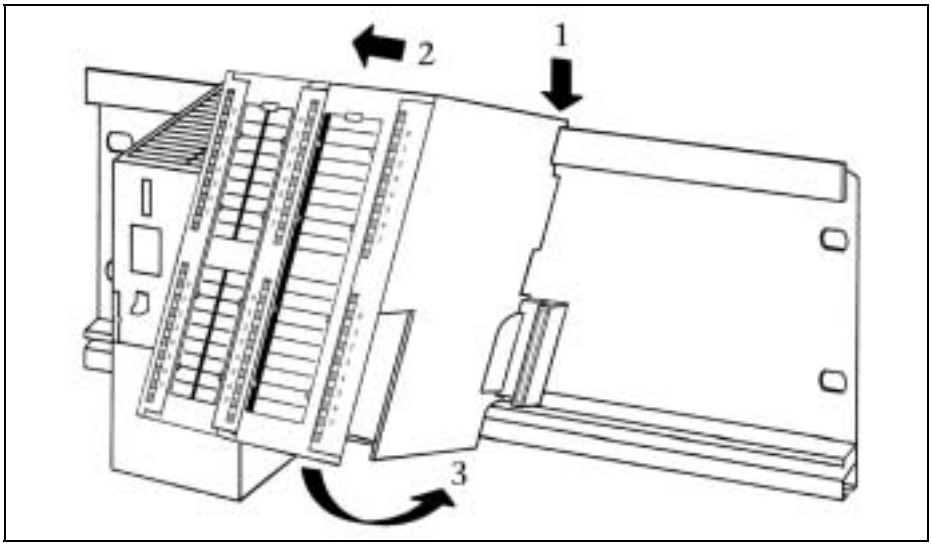

Screw the modules on with a torque of 0.8 to 1.1 Nm.

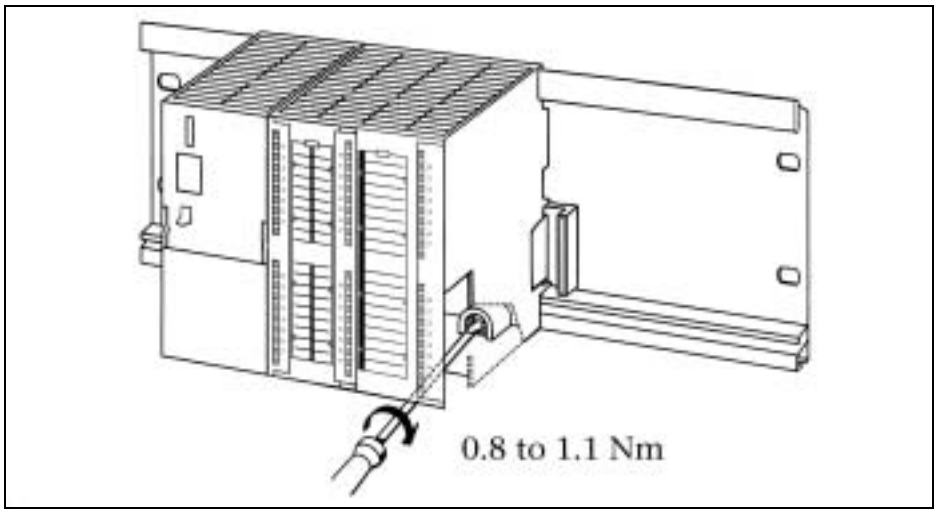

3 System Overview

3.1 Application and function description

The PAS 300 Profibus Slave Interface from Systeme Helmholz GmbH is for linking digital and analog input and output modules to the Profibus DP. The module can be mounted on a sectional rail.

Up to 12 modules can be connected to the PAS 300. The PAS 300 is integrated into the hardware configurer of the programming system by a GSD file. The PAS 300 interface performs all communication between the modular I/O device and the higher-level master unit on the PROFIBUS-DP.

The inputs and outputs are assigned to the master during configuration. The PAS 300 module supports all input/output modules from Systeme Helmholz GmbH and numerous modules of the same type from other manufacturers.

The PAS 300 module works according to DP/V0 and supports baudrates of 9.6 KBaud to 12 MBaud. The baudrate is detected automatically.

Active backplane modules are not supported !

3.2 Connections

The PAS 300 module has terminals for the power supply, a Sub D connector for the Profibus, and an 8-way DIL switch for address setting behind the front flap.

3.3 LED displays

The three LEDs on the front of the module inform you about its operating state.

LED BA (green):

Continuous light indicates that the module is in cyclic Profibus operation.
A flashing light indicates that the module is waiting for parameterization.

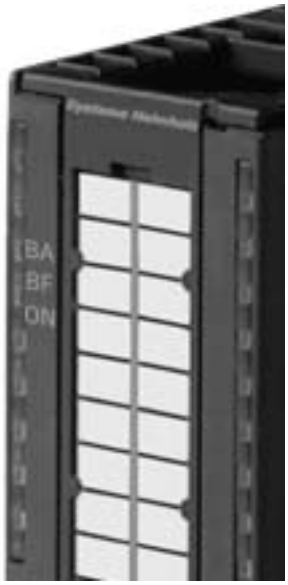

LED BF (red):

A continuous light indicates a diagnostic error.
If the BF LED flashes the Profibus address is incorrect (<1 or >126).
Flashing light with simultaneously flashing ON-LED indicates a backplane bus error (no or more than 12 modules detected).

If all three LEDs are flashing, there is a serious error.

LED ON (yellow):

24 V power supply is present.

3.4 Accessories

Manual, German	900-153-1AA02
Manual, English	901-153-1AA02
Profibus connector	700-972-0BA11
Profibus connector with PG connection socket	700-972-0BB11
Profibus connector with axial cable outlet	700-972-0CA11
Insulation stripping tool for Profibus	700-972-6AA00
Repeater for MPI and Profibus	700-971-0AA01
Hub for MPI and Profibus	700-751-MPV20
Profibus radio link	700-760-0PB01

4 Configuration

4.1 Hardware configurer

The PAS 300 module is integrated into the programming software of the PLC via a GSD file.

Let's take a look at how this works with the Siemens programming software.

To be able to use the PAS 300 in the hardware configuration, the GSD file must be installed once. First copy the GSD file supplies to any location on your hard disk.

Make sure no projects are open in the hardware configurer at this point!

Then select the function "Install new GSD..." from the "Tools" menu in the hardware configurer, look for the GSD file on the hard disk, and select it. The file is called "HELM06AD.GSD".

The information about the PAS 300 module is now added to the selection catalog of the hardware configurer.

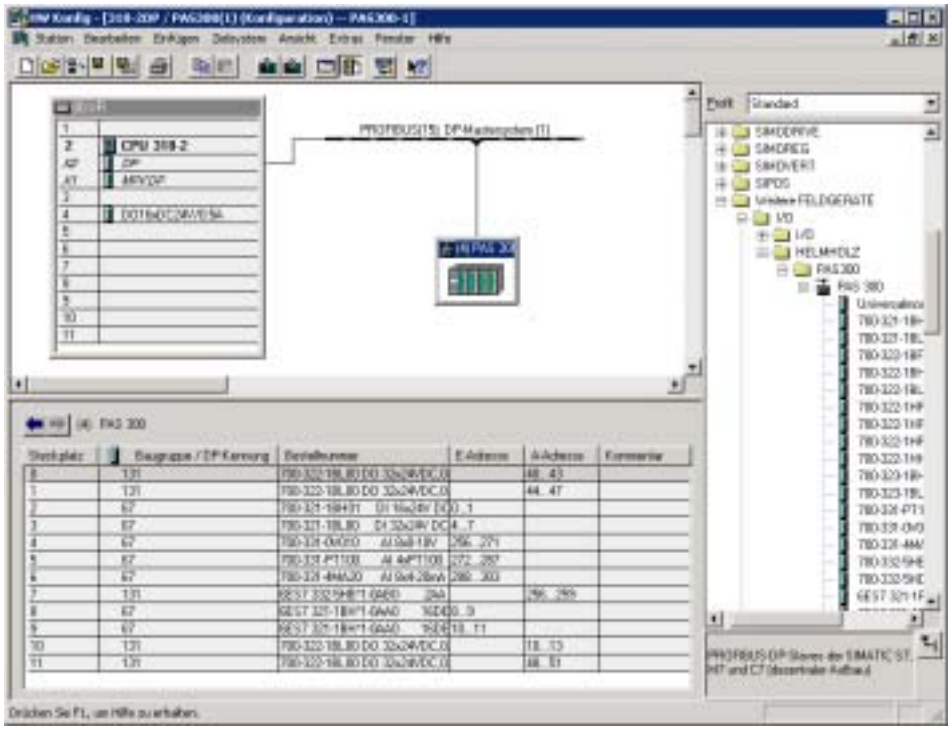

You will find the PAS 300 in the catalog under "Profibus-DP / More FIELD DEVICES / HELMHOLZ / PAS300".

Configuration then continues in the same way as for Profibus stations.

4.2 Slot identification

If you are using parameterizable modules with PAS300, please note that each module requires slot identification.

For example, when an analog input module is to be plugged into slot 4 of the rack, use the corresponding slot identifier 4:

The DP master should be parameterized in „S7-compatible“mode! Otherwise slot numbers will not be displayed correctly.

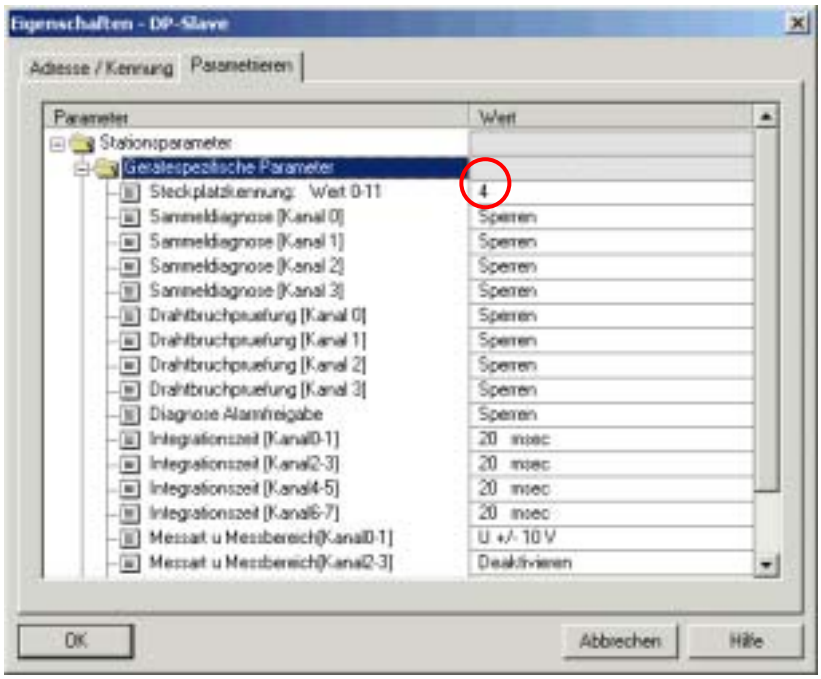

4.3 Address setting

The PAS 300 module has an 8-pin DIL switch under the front flap that is used to set the address of the module in the Profibus network.

Switches 1 - 7 are set for the bit positions of the address:

Addresses 0 and 127 must not be set!

Switch position	1	2	3	4	5	6	7
Value when ON	1	2	4	8	16	32	64

The highest permitted Profibus address is 126.

The address set on the DIL switch is only taken over on a restart (power ON).

Switch 8 enables the ET200M compatibility mode

The switch 8 enables the ET200M compatibility mode. The PAS 300 behaves in this mode like a IM153-1, and can be used as a replacement of this module.

In this mode the PAS 300 can only be used with 8 I/O-modules. Use only the modules listed in chapter Fehler! Verweisquelle konnte nicht gefunden werden..

4.4 Programming

Programming of the PAS 300 module is unnecessary. Parameterization data for the modules connected to the PAS 300 are automatically transferred to the Profibus. Depending on the PLC system used, the I/O information of the PAS 300 is automatically taken over into the process image.

Process alarms (OB40) are not supported.

For error diagnostics of the PAS 300 in the PLC, the usual system modules can be used.

For PLCs of the Simatic® S7 range, for example, the diagnostic alarm OB (OB82) and the module rack failure OB (OB86) are supported.

4.5 Modules supported

4.5.1 Digital

Type	Siemens	Systeme Helmholz
DI 16x 24 V DC	6ES7-321-1BH0*	700-321-1BH0*
DI 16x 24 V DC, m-reading	6ES7-321-1BH5*	-
DI 16x 24 V DC, ext. temp.	6ES7-321-1BH8*	-
DI 32x 24 V DC	6ES7-321-1BL00	700-321-1BL00
DI 32x 24 V DC, ext. temp.	6ES7-321-1BL80	-
DI 16x 24-48 V DC	6ES7-321-1CH00	-
DI 16x 48-120 V DC, ext. temp.	6ES7-321-1CH80	-
DI 16x 120 V AC	6ES7-321-1EH0*	-
DI 32x 120 V AC	6ES7-321-1EL00	-
DI 8x 230 V AC	6ES7-321-1FF0*	-
DI 8x 230 V AC ext. temp.	6ES7-321-1FF81	-
DI 18x 230 V AC	6ES7-321-1FH00	-
DI 16x 24 V DC, diagnostic capable	6ES7-321-7BH00	-
DI 16x 24 V DC, diagnostic capable, ext. temp.	6ES7-321-7BH80	-
DO 8x 24 V DC, 2 A	6ES7-322-1BF0*	700-322-1BF01
DO 16x 24 V DC, 0.5 A	6ES7-322-1BH0*	700-322-1BH01
DO 16x 24 V DC, 0.5 A, ext. t.	6ES7-322-1BH81	-
DO 32x 24V DC, 0.5 A	6ES7-322-1BL00	700-322-1BL00
DO 32x 24V DC, 0.5 A, ext. t.	6ES7-322-1BL80	-
DO 8x48-120 V/230 V AC, 1.5 A, ext. temp.	6ES7-322-1CF80	-
DO 8x 120 V/230 V AC, 1 A	6ES7-322-1FF0*	-
DO 8x 120 V/230 V AC, 1 A, ext. t.	6ES7-322-1FF81	-
DO 16x 120 V/230 V AC, 0.5A	6ES7-322-1FH00	-
DO 16x 120 V AC, 0.5 A	6ES7-322-1EH0*	-
DO 32x 120 V AC, 1 A	6ES7-322-1EL00	-
DO 8x relays, 2 A	6ES7-322-1HF0*	700-322-1HF01
DO 8x relays, 5 A	6ES7-322-1HF10	700-322-1HF10
DO 8x relays, 5 A, ext. temp.	6ES7-322-1HF80	-
DO 8x relays, 5 A, overvolt. prot.	6ES7-322-1HF20	700-322-1HF20
DO 16x relays, 8 A	6ES7-322-1HH0*	700-322-1HH01
DI/DO 8x 24V DC	6ES7-323-1BH0*	700-323-1BH0*
DI/DO 8x 24V DC, ext. temp.	6ES7-323-1BH81	-
DI/DO 16x 24V DC	6ES7-323-1BL00	700-323-1BL00
Dummy module	6ES7-370-0AA0*	-

4.5.2 Analog

Type	Siemens	Systeme Helmholz
AI 8x 0-10V/20 mA/PT100	6ES7-331-7KF0*	-
AI 2x 0-10V/20 mA/PT100	6ES7-331-7KB0*	-
AI 2x 0-10V/20 mA/PT100, ext. t.	6ES7-331-7KB81	-
AI 4x PT100	-	700-331-PT100
AI 8x 0-10 V	-	700-331-0V010
AI 8x 20 mA	-	700 331-4MA20
AO 4x 0-10 V/20 mA	6ES7-332-5HD0*	700-332-5HD01
AO 4x 0-10 V/20 mA, 15 bits	6ES7-332-7ND00	-
AO 2x 0-10 V/20 mA	6ES7-332-5HB0*	700-332-5HB01
AO 2x 0-10 V/20 mA, ext. t.	6ES7-332-5HB81	-
AI 4x 0-10 V/4-20 mA, AO 2x 0-10 V/4-20 mA	6ES7-334-0CE0*	-

4.5.3 Modules not supported

Type	Siemens	Systeme Helmholz
CAN 300 Master	-	700-600-CAN01
AI 8x 0-10 V/20 mA, enh. resol.	6ES7-331-7NF*0	-
AI 8x thermoresistors/elements	6ES7-331-7PF*0	-
AI 4x 0-10 V/4-20 mA/PT100, AO 2x 0-10V/4-20 mA	6ES7-334-0KE00	-
FM modules	xxx	-
CP modules	xxx	-
Ex modules	xxx	-

5 Technical data

Order number PAS 300	700-153-1AA02
Dimensions	116 x 40 x 125 mm³ (L x W x H)
Weight	Approx. 280 g

Profibus interface

Type:	RS 485
Transmission rate:	9.6 KBaud to 12 MBaud, Automatic detection
Protocol:	Profibus DP/V0 acc. to EN 50170
Connector:	Connector, SUB D 9-way

Power supply

Voltage:	+24 V DC via 3-pin terminal
Power consumption:	625 mA (typ.), depending on number and type of plugged modules

Backplane bus

Output voltage:	5 V DC on backplane bus
Output current:	1 A on backplane bus
Address range:	128 bytes for inputs 128 bytes for outputs
Number of modules:	max. 12 digital or 8 analog (GSD) max. 8 digital/analog (ET200M mode)

Special features

Quality assurance:	According to ISO 9001:2000
Maintenance:	Maintenance-free (no battery, rechargeable or non-rechargeable)

5.1 Pin assignment

Pin	Profibus/Sub D conn. PC 9-way
1	-
2	-
3	DATA B
4	-
5	GND
6	+5 V
7	-
8	DATA A
9	-

Pin	24 V / 3-way
1	+24 V
2	GND
3	Shield

5.2 Further documentation

Internet: www.helmholz.de, www.profibus.de

Siemens manuals: "Installing and Wiring the S7-300/S7-400", "S7-300 Module Data", and "System Software for S7-300 and S7-400"

"Profibus DP/DPV1", Manfred Popp, Hüthig Verlag